DH-SD8C448PA1-HNF

4MP 48x Starlight IR Network PTZ Camera



- 1/1.8" 4Megapixel STARVIS™ CMOS.
- 48× optical zoom.
- Ultra Starlight technology.
- Max. 50/60 fps@4M.
- IR distance up to 500 m.
- H.265 encoding.
- Auto-tracking.
- Perimeter protection.
- Face recognition.
- Metadata.
- IP67.



Launched by Dahua Technology, Dahua WizMind is a full portfolio of solutions composed of project-oriented products including IPC, NVR, PTZ, XVR, Thermal and software platform which adopts industry-leading deep learning algorithms. Focusing on customer's requirements, WizMind provides precise, reliable and comprehensive AI solutions for verticals.

System Overview

Embedded with an advanced AI chip, this series of cameras provides an all-in-one solution for video surveillance of large areas. Outranking conventional cameras with its extended monitoring range, it automatically tracks targets. It also produces vivid images whether day or night, using infrared technology. It is suitable for a wide variety of scenarios, such as advanced defense areas that require high levels of control.

Functions

Face Recognition

Face attributes are extracted from captured faces, and stored in a database where they can be conveniently searched for and compared against other images. Once a successful match is found, the system outputs the result. The Dahua Face Recognition camera supports a built-in database that stores up to 10,000 face images, allowing the camera to capture and compare face images in real time.

Perimeter Protection

Automatically filters out false alarms caused by animals, rustling leaves, bright lights, and more, and uses secondary recognition during target detection to improve alarm accuracy.

Smart H.265+ & Smart H.264+

With advanced scene-adaptive rate control algorithm, Dahua smart encoding technology realizes the higher encoding efficiency than H.265 and H.264, provides high-quality video, and reduces the cost of storage and transmission.

Video Metadata

Metadata is information on the attributes of targets that is extracted during monitoring. It can be used for data retrieval. There are four kinds of metadata supported by Dahua PTZ WizMind cameras: Human face, human body, motor vehicle and non-motor vehicle. Face information includes gender, age, glasses, masks, beards, and more. Human body information includes hat, top, top color, bottom, bottom color, bag, and more. Motor vehicle information includes plate color, type, vehicle color, sun visor, ornament, calling, seatbelt, smoking, annual inspection sticker, and more. Non-motor vehicle information includes type, color, top type, top color, people number, and more.

Environment (–40 °C to +70 °C, IP67)

Developed to operate in extreme conditions, Dahua camera can function in temperatures ranging from –40 °C to +70 °C (–40 °F to +158 °F) at 95% humidity. It was subjected to rigorous dust and water immersion tests, gaining its IP67 Ingress Protection certification, making it suitable for demanding outdoor applications.

Scene

In scenes with low illumination, Dahua's Starlight Ultra-Low Light Technology increases the light-sensitivity of cameras, enabling them to produce vivid images even when lighting is as low as 0.005 lux. The camera also offers a set of optical features that balance light throughout the scene, strongly enhancing visibility in dark environment.

Technical Specification

Camera

Image Sensor	1/1.8" CMOS
Pixel	4 MP
Max. Resolution	2560 (H) × 1440 (V)
ROM	8 GB
RAM	2 GB
Electronic Shutter Speed	1/1 s–1/30,000 s
Scanning System	Progressive
Min. Illumination	Color: 0.001 lux@F1.4 B/W: 0.0001 lux@F1.4 0 lux (IR light on)
Illumination Distance	600 m (1,968.50 ft)
Illuminator On/Off Control	Zoom Prio; Manual; Smart IR; Off
Illuminator Number	10 (IR light)
Wiper	Yes

Lens

Focal Length	6.25 mm–300 mm			
Max. Aperture	F1.4–F4.5			
Field of View	H: 62.4°–1.7°; V: 36.6°–1.0°; D: 69.8°–2.0°			
Optical Zoom	48×			
Focus Control	Auto; semi-auto; manual			
Close Focus Distance	0.5 m–2 m (1.64 ft–6.56 ft)			
DORI Distance	Detect	Observe	Recognize	Identify
	6,000 m (19,685.04 f)	2,381 m (7,811.68 f)	1,200 m (3,937.01 f)	600 m (1,968.50 f)

PTZ

Pan/Tilt Range	Pan: 0° to 360° endless Tilt: –20° to +90°
Manual Control Speed	Pan: 0.1°/s–240°/s Tilt: 0.1°/s–100°/s
Preset Speed	Pan: 0.1°/s–200°/s; Tilt: 0.1°/s–60°/s
Preset	300
Tour	8 (up to 32 presets per tour)
Pattern	5
Scan	5
Power-off Memory	Yes
Idle Motion	Pattern; Preset; Scan; Tour
PTZ Protocol	DH-SD Pelco-P/D (auto recognition)

Intelligence

Video Metadata	Support human body, human face, motor vehicle and non-motor vehicle image capture and attributes extraction.
IVS (Perimeter Protection)	Tripwire; intrusion; climbing fences; loitering detection; abandoned/missing object; fast moving; parking detection; people gathering; vehicle/human alarm classification
Face Recognition	Yes
Auto Tracking	Yes

Video

Video Compression	H.264H; Smart H.265+; H.264; H.265; MJPEG (Sub Stream 1); Smart H.264+
Streaming Capability	3 streams
Resolution	4M (2560 × 1440); 1080p (1920 × 1080); 960p (1280 × 960); 720p (1280 × 720); D1 (704 × 576/704 × 480); VGA (640 × 480); CIF (352 × 288/352 × 240)
Video Frame Rate	Main stream: 4M/1080p/960p/720p (1–50/60 fps) Sub stream 1: D1/VGA/CIF (1-25/30 fps) Sub stream 2: 1080p/960p/720p (1-25/30 fps)
Bit Rate Control	CBR; VBR
Day/Night	Auto (ICR); Color; B/W
BLC	Yes
WDR	120 dB
HLC	Yes
White Balance	Auto; indoor; outdoor; tracking; manual; sodium lamp; natural light; street lamp
Gain Control	Auto; manual
Noise Reduction	2D NR; 3D NR
Motion Detection	Yes
Region of Interest (RoI)	Yes
Defog	Optical
Digital Zoom	16×
Image Rotation	180°
Privacy Masking	Up to 24 areas can be set, with up to 8 areas in the same view; multiple colors available
S/N Ratio	≥55 dB

Audio

Audio Compression	PCM; G.711a; G.711Mu; G.726; MPEG2-Layer2; G722.1; G729; G723

Network

Network Port	RJ-45 (10/100 Base-T)
Network Protocol	FTP; RTMP; IPv6; Bonjour; IPv4; DNS; RTCP; PPPoE; NTP; RTP; 802.1x; HTTPS; SNMP; TCP/IP; DDNS; UPnP; NFS; ICMP; UDP; IGMP; SMB; HTTP; SSL; DHCP; SMTP; QoS; RTSP; ARP
Interoperability	CGI; SDK; ONVIF (Profile S&G&T)
Streaming Method	Unicast; Multicast
User/Host	20 (total bandwidth: 64 M)
Storage	FTP; Micro SD card (512 GB)
Browser	IE 9 and later versions Chrome 41 and later versions Firefox 50 and later versions Safari 10 and later versions

Mobile Client	iOS; Android

Port

Analog Output	1 channel (CVBS output, BNC)
RS-485	1 (baud rate: 1,200 bps–115,200 bps)
Audio Input	1 channel (LINE IN, bare wire)
Audio Output	1 channel (LINE OUT, bare wire)
Alarm I/O	7/2
Audio I/O	1/1
Alarm Linkage	Capture; preset; tour; pattern; recordings; alarm digital input; send email
Alarm Event	Motion/tampering detection; audio detection; network disconnection detection; IP conflict detection; decoder state detection; memory card state detection; memory space detection; power exception detection

Power

Power Supply	36 VDC, 2.23 A (± 25%), Hi-PoE
Power Consumption	Basic: 18 W Max.: 33 W (illuminator + PTZ)

Environment

Operating Temperature	–40 °C to +70 °C (–40 °F to +158 °F)
Operating Humidity	≤95%
Protection	IP67; TVS 8000 V lightning proof; surge protection; voltage transient protection

Structure

Product Dimensions	442 mm × Φ262 mm (17.40" × Φ10.31")
Net Weight	10.3 kg (22.71 lb)
Gross Weight	12.5 kg (27.56 lb)

Accessories

Included:



DC36V/2.23A
Power Adapter



PFB306W-S
Wall Mount Bracket

Optional:



PFB718C-SG
Ceiling Mount Bracket



PFB711C-SG
Ceiling Mount Bracket



PFA5500 + PFB306W-S
Vertical Pole Mount Bracket



PFA5500 + PFB718C-SG
Horizontal Pole Mount Bracket



PFA151 + PFB306W-S
Corner Mount Bracket

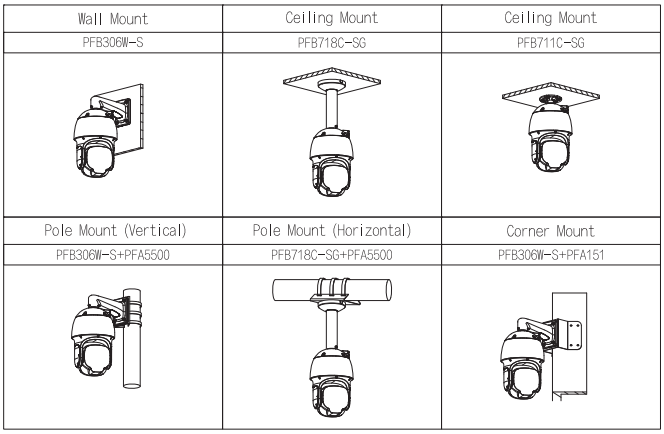

Ordering Information

Type	Model	Description
4M Camera	DH-SD8C448PA1-HNF	4MP 48x Starlight IR Network PTZ Camera
	SD8C448PA1-HNF	4MP 48x Starlight IR Network PTZ Camera
Accessories	DC36V/2.23A	Power Adapter
	PFB306W-S	Wall Mount Bracket
	PFB718C-SG	Ceiling Mount Bracket
	PFB711C-SG	Ceiling Mount Bracket
	PFA5500 + PFB306W-S	Vertical Pole Mount Bracket
	PFA5500 + PFB718C-SG	Horizontal Pole Mount Bracket
	PFA151 + PFB306W-S	Corner Mount Bracket

Dimensions (mm[inch])

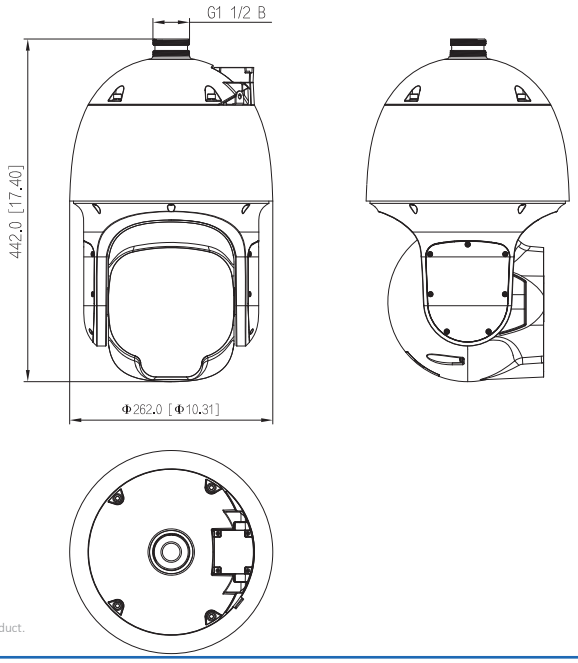

Rev 002.000 © 2023 Dahua. All rights reserved. Design and specifications are subject to change without notice.
The images, specifications and information mentioned in the document are only for reference, and might differ from the actual product.