Eyeball Network Camera

Quick Start Guide



ZHEJIANG DAHUA VISION TECHNOLOGY CO., LTD. V1.0.6

Foreword

General

This manual introduces the installation and operations of the network camera. Read carefully before using the device, and keep the manual safe for future reference.

Symbols

The following symbols might appear in the manual.

Symbol	Description
WARNING	Indicates a medium or low potential hazard which, if not avoided, could result in slight or moderate injury.
CAUTION	Indicates a potential risk which, if not avoided, could result in property damage, data loss, reductions in performance, or unpredictable result.
NOTE	Provides additional information as a supplement to the text.

Revision History

Version	Revision Content	Release Time
V1.0.6	Updated the packing list of the device.	October 2026
V1.0.5	Deleted dimensions.	April 2024
V1.0.4	Updated the information of cable and SD card installation.	July 2022
V1.0.3	Updated SD card installation.	November 2021
V1.0.2	Updated the **Important Safeguards and Warnings** section.	April 2021
V1.0.1	Updated the pictures of attaching the camera.	September 2020
V1.0.0	First release.	May 2020

Privacy Protection Notice

As the device user, you might collect the personal data of individuals such as their names, email addresses, face images, audio and fingerprints. You shall be fully responsible for any activities associated with processing personal data. You commit to comply with your local privacy protection laws and regulations to protect the legitimate rights and interests of individuals, and shall implement measures which are required by applicable law, including but not limited to, providing clear and comprehensive information to individuals before processing their personal data, obtaining consent

from individuals when necessary, informing individuals of the existence of the surveillance area, and providing required contact information.

Intelligent Product Usage Statement

Intelligent products utilize AI technology to effectively enhance security. The intelligent recognition and alarm functions of the product might be affected by factors such as environmental lighting, camera angles, object obstructions, and network delays, potentially leading to false alarms, missed alerts, or response delays. This intelligent product is solely intended to be used as a security assistance tool. The results from performing identification are for reference only and do not constitute absolute guarantee of personal or property safety. Users need to combine these products with necessary physical security measures to enhance overall protection. Except as otherwise provided by laws or in the event of intentional or gross negligence on the part of the company, the company shall not be liable for any losses caused by the aforementioned factors not attributable to the company.

About the Manual

- This manual is provided for general reference only. Discrepancies might exist between the product and this manual, including but not limited to printed, electronic, or any other editions.
- The manual will be updated according to the latest laws and regulations of related jurisdictions. Specifications and documentation are subject to change without prior notice. For the latest versions, as well as legal notices, consult the printed manual, the product webpage, our official website, or scan the QR code to access the electronic edition.
- The manual will be updated as necessary to reflect product changes and applicable legal requirements. These updates will not diminish your statutory rights, nor will they remove or weaken the safety information or essential instructions provided at the time of purchase.
- Although we make every effort to ensure accuracy, errors or deviations in descriptions of functions, operations, or technical data might occur. If there is any uncertainty or controversy, we reserve the right of final explanation.
- All trademarks, registered trademarks and company names referenced in this manual are the property of their respective owners.

Important Safeguards and Warnings

This section introduces content covering the proper handling of the device, hazard prevention, and prevention of property damage. Read carefully before using the device, and comply with the guidelines when using it.

Personnel Qualification Requirements

- The installer of the device must have required certification or qualified training for installing closed-circuit television (CCTV) systems. They must also be trained and certified to work at heights, and must have knowledge and skills in the following areas:
  - Basic knowledge and skills in installing CCTV systems and components.
  - Basic knowledge and skills in low-voltage wiring and in connecting low-voltage electronic circuits.
  - The ability to read and understand the manual.
- All maintenance personnel of the device must have required certification or qualified training for performing maintenance on closed-circuit television (CCTV) systems. They must also be trained and certified to work at heights, and must have knowledge and skills in the following areas:
  - Basic knowledge and skills in installing CCTV systems and components.
  - Basic knowledge and skills in low-voltage wiring and in connecting low-voltage electronic circuits.
  - The ability to read and understand the manual.

Laser Protection

Only applicable to laser products.



Laser Radiation!

- For devices that support lasers, do not aim the laser directly at eyes.
- When installing the laser device, keep it a proper distance away from flammables. Do not direct the laser beam at such materials to avoid the risk of fire.
- We recommend implementing the following protective measures for the laser camera to prevent injury during operation.
  - Install a light and sound alarm to indicate laser hazard.
  - For devices with a laser fill-light, the laser must have external control through means such as a remote key or remote switch to ensure prompt deactivation in an emergency.

- For devices with a laser fill-light, a manual reset switch must be installed to control the laser's operational state in an emergency.

Transportation Requirements



- Transport the device under allowed humidity and temperature conditions.
- Do not place heavy stress on the device, violently vibrate or immerse it in liquid. The device must not be thrown, rolled over or stepped on. Handle with care during transportation.
- Pack the device with packaging provided by its manufacturer or packaging of the same quality. Whether it is delivered by the contractor or returned to the factory for repair, we will assume no responsibility for any damage or problems caused during transportation due to the incomplete package being sent.

Storage Requirements



- Do not expose the device to fire sources, and do not store it together with corrosive, flammable or explosive materials.
- Store the device under allowed humidity and temperature conditions.
- Do not place the device in a humid, dusty, extremely hot or cold site that has strong electromagnetic radiation or unstable illumination.
- Do not place heavy stress on the device, violently vibrate or immerse it in liquid during storage.

Installation Requirements

**DANGER**

- Make sure that the power is off when you connect the cables, install or disassemble the device.
- Buckle the safety hook before installing the device if it is included.

**WARNING**

- Strictly comply with the local electrical safety code and standards. Make sure that the ambient voltage is stable and meets the power supply requirements of the device.
- The power supply must meet the rated voltage requirements as indicated on the device label.
- If the device uses a power adapter, ensure it meets the following requirements:
  - If a power adapter was shipped with your device, we recommend you use it. If you need to buy a separate adapter, make sure it meets the following requirements.

- The power supply must conform to the requirements of IEC 60950-1 and IEC 62368-1 standards.
- The voltage must meet the SELV (Safety Extra Low Voltage) requirements and not exceed ES-1 standards.
- When the power of the device does not exceed 100 W, the power supply must meet LPS requirements and be no higher than PS2.

◇ Do not connect the power adapter to the device while the adapter is powered on.

- Do not connect the device to two or more kinds of power supplies, unless otherwise specified, to avoid damage to the device.
- The device must be installed in a location that only professionals can access, to avoid the risk of non-professionals becoming injured from accessing the area while the device is working. Professionals must have full knowledge of the safeguards and warnings of using the device.



- Install the device under allowed humidity and temperature conditions.
- Do not place heavy stress on the device, violently vibrate, immerse it in liquid or let it fall during installation.
- An all-pole power switch complying with the required standards must be installed in the power supply circuit of any device directly connected to the mains electricity.
- An emergency disconnect device must be installed during installation and wiring at a readily accessible location for emergency power cut-off.
- When installing the device, make sure that the converter is installed inside the bracket.
- To avoid damage, keep the device away from televisions, radio transmitters, electromagnetic devices, electric machines, transformers, and speakers. Do not install it in places with smoke or vapor, high temperature, and lots of dust. Do not install the device near a heating furnace and other heat sources, such as a spotlight, kitchen, and boiler room.
- We recommend you use the device with a lightning protection device for stronger protection against lightning. For outdoor scenarios, strictly comply with the lightning protection regulations.
- Before you install the device, make sure the salt spray tolerance level corresponds to the model. Do not install the device in an environment with higher salt spray levels than it can tolerate. For use in corrosive environments or other special conditions, consult customer service to avoid damage to the device's appearance or function. There are three salt spray tolerance levels for the device.

◇ General Protection: Products of this level are suitable for use in areas that do not require specific protection. Do not use in environments with high concentrations of corrosive substances, such as chlorides or sulfur dioxide (SO_2), including the seaside and chemical plants.

- ◇ Medium Protection: Products of this level are suitable for areas with medium protection requirements. Typical scenarios include coastal regions beyond 2 km from the shoreline and areas affected by acid rain.
- ◇ Professional Protection: Products of this level are suitable for areas with professional protection requirements. Typical scenarios include locations within 2 km or closer to corrosive environments such as coastlines and chemical plants.

- The dome cover is an optical component. Do not directly touch or wipe the surface of the cover during installation.
- Do not install the device in an environment that shares common ground with a switch or NVR to avoid interference from electrical signals, which affect the negotiation of the terminal. If the device must share common ground, use insulation material to separate the device from the common ground such as expansion bolts.
-  Reliably ground the grounding terminal of the device to improve safety. The grounding terminal differs depending on the device, and some devices do not have grounding terminals. Process the situation according to the device model.

Operation Requirements

DANGER

- Battery Pack Precautions

  Preventive measures (including but not limited to):

  - ◇ Do not transport, store or use the batteries in high altitudes with low pressure and environments with extremely high and low temperatures.
  - ◇ Do not dispose the batteries in fire or a hot oven, or mechanically crush or cut the batteries to avoid an explosion.
  - ◇ Do not leave the batteries in environments with extremely high temperatures to avoid explosions and leakage of flammable liquid or gas.
  - ◇ Do not subject the batteries to extremely low air pressure to avoid explosions and the leakage of flammable liquid or gas.
- Do not connect multiple devices to the same power adapter to avoid the risk of overheating or fire if the rated load is exceeded. Please use the power adapter provided by the manufacturer.
- The illuminators of some devices emit a blue light that is hazardous to eyes. Do not look directly at the light source to avoid damaging your eyes.

WARNING

- If the device is being used in a domestic environment, it might cause radio interference. Set appropriate measures to mitigate such interference.
- Place the device in a location that children cannot easily access.
- Make sure there are no foreign metal objects or flammables in the device. Foreign objects inside the device might cause fire, short-circuits and damage to the device.

- Do not allow any liquid to enter the device, and avoid exposure to rain or sea water to prevent damage to internal components. Power off the device and disconnect the power cord immediately if water or other liquids flow into it, and contact after-sales service. Devices with an enclosure protection rating lower than IP66 might pose a risk of fire or electric shock if exposed to rain or moisture.
- Immediately cut the power and disconnect the power cord if smoke, noise or a disgusting smell comes from the camera. Make sure to contact your local retailer or after-sales service.



- Use the device under allowed humidity and temperature conditions.
- The cover must not be opened while the device is powered on.
- Do not touch the heat dissipation component of the device to avoid the risk of getting burnt.
- Do not aim the device at strong light sources (such as lamplight, and sunlight) when focusing it, to avoid reducing the lifespan of the CMOS sensor, and causing overbrightness and flickering.
- When using a laser beam device, avoid exposing the device surface to laser beam radiation.
- Do not block the ventilation opening near the device to avoid heat accumulation.
- Protect the line cord and wires from being walked on or squeezed particularly at plugs, power sockets, and the point where they exit from the device.
- Do not directly touch the photosensitive CMOS. Use an air blower to clean the dust or dirt on the lens.
- The dome cover is an optical component. Do not directly touch or wipe the surface of the cover when using it.
- There might be a risk of electrostatic discharge on the dome cover. Power off the device when installing the cover after the camera finishes adjustment. Do not directly touch the cover and make sure the cover is not exposed to other equipment or human bodies.
- Strengthen the protection of the network, device data and personal information. All necessary safety measures to ensure the network security of the device must be taken, such as using strong passwords, regularly changing your password, updating firmware to the latest version, and isolating computer networks. For the IPC firmware of some previous versions, the ONVIF password will not be automatically synchronized after the main password of the system has been changed. You need to update the firmware or change the password manually.
- We are not liable for any problems caused by the incorrect use of the device.
- We are not liable for any problems caused by overuse of certain components.

Maintenance Requirements



Replacing unwanted batteries with the wrong type of new batteries might result in explosion.

Preventive measures (including but not limited to):

- Replace unwanted batteries with new batteries of the same type and model to avoid the risk of fire and explosion.
- Dispose of the old batteries as instructed.



- Strictly follow the instructions to disassemble the device. Non-professionals dismantling the device can result in it leaking water or producing poor quality images. For a device that is required to be disassembled before use, make sure the seal ring is flat and in the seal groove when putting the cover back on.
- When you find condensed water forming on the lens or the desiccant changes color after you disassemble the device, contact after-sales service to replace the desiccant. Desiccants might not be provided depending on the model.
- Use the accessories suggested by the manufacturer. Installation and maintenance must be performed by qualified professionals.
- Do not directly touch the photosensitive CMOS. Use an air blower to clean the dust or dirt on the lens. When it is necessary to clean the device, slightly wet a soft cloth with alcohol, and gently wipe away the dirt.
- Clean the device body with a soft dry cloth. If there are any stubborn stains, clean them away with a soft cloth dipped in a neutral detergent, and then wipe the surface dry. Do not use volatile solvents such as ethyl alcohol, gasoline, benzene, diluent, or abrasive detergents on the device. Also, avoid prolonged contact between plastic and rubber materials and the device housing, as these may damage the coating and degrade the performance of the device.
- The dome cover is an optical component. When it is contaminated with dust, grease, or fingerprints, use degreasing cotton moistened with a little ether or a clean soft cloth dipped in water to gently wipe it clean. An air gun is useful for blowing dust away.
- It is normal for a camera made of stainless steel to develop rust on its surface after being used in a strong corrosive environment (such as the seaside, and chemical plants). Use an abrasive soft cloth moistened with a little acid solution (vinegar is recommended) to gently wipe it away. Afterwards, wipe it dry.
- For devices requiring lens replacement, such as box network cameras, we recommend laying the device and lens flat during the process. This helps prevent metal shavings and dust in the environment from falling onto the lens, filter or CMOS sensor, which could affect imaging quality.

Table of Contents

Foreword I
Important Safeguards and Warnings III
1 Introduction 1
1.1 Appearance 1
1.2 Cable 1
1.3 Connecting Alarm Input/Output 3
2 Network Configuration 5
2.1 Initializing the Camera 5
2.2 Changing the Device IP Address 6
2.3 Logging in to the Webpage 7
3 Installation 8
3.1 Packing List 8
3.2 Installing the Camera 8
3.2.1 (Optional) Installing the SD Card 8
3.2.2 Attaching the Camera 9
3.2.3 Waterproofing the Power Cord 11
3.2.4 Installing the Waterproof Connector 11
3.2.5 Adjusting the Lens Angle 13

1 Introduction

1.1 Appearance

This manual is available for the following appearances.

Figure 1-1 Available appearances

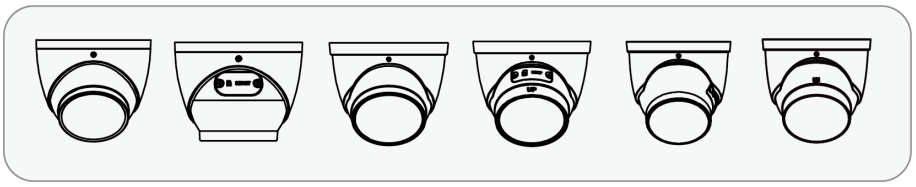

1.2 Cable

- Waterproof all the cable joints with insulating tape and waterproof tape to avoid short circuits and water damage. For details, see FAQ manual.
- This chapter comprehensively details cable composition. The actual product might not include all described features. During installation, refer to this chapter to understand cable function.
- Some ports are available on select models. For details, see the actual device.

Figure 1-2 Cables

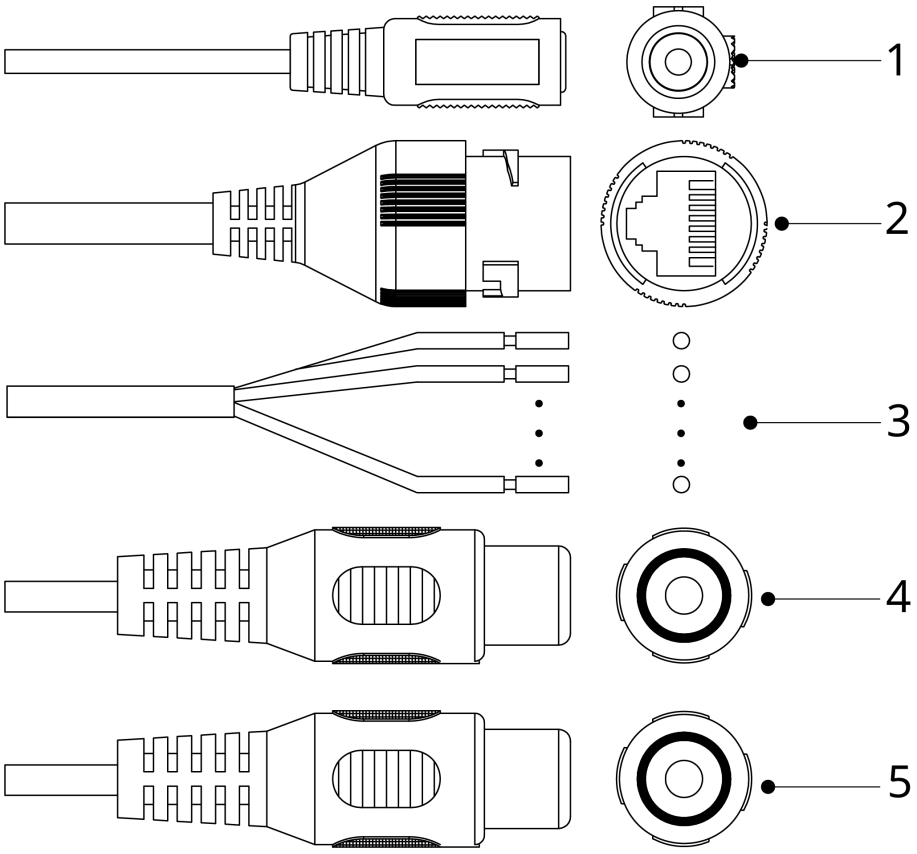

Table 1-1 Cable information

No.	Name	Description
1	Power input port	Inputs 12 VDC power. Supplies power as instructed in the manual. ⚠ The device might become damaged or behave abnormally if power is not correctly supplied.
2	Ethernet port	• Connects to the network. • Provides power to the device with PoE. 📖 Only PoE models support PoE function.
3	Alarm I/O port	Includes alarm signal input and output ports. The number of I/O ports might vary with devices. For details, see the following table.
4	Audio input port	Connects to sound pickups to receive audio signals.
5	Audio output port	Connects to speakers to output audio signals.

Table 1-2 Description of alarm I/O port

Name	Description
ALARM_IN	Receives the switch signal of external alarm sources.
ALARM_IN_GND	Connects different alarm input devices to the same ALARM_IN_GND port.
ALARM_OUT	Outputs alarm signals to alarm devices.
ALARM_OUT_GND	When the camera is connected to an alarm device, only the ALARM_OUT port and ALARM_OUT_GND port with the same number can be used together.

1.3 Connecting Alarm Input/Output

The camera can connect to external alarm input or output devices through the digital input or output port.

Alarm input or output is available on select models.

Procedure

Step 1 Connect the alarm input device to the alarm input end of the I/O port.

The device collects different statuses of the alarm input port while the input signal is idling or being grounded.

- The device collects logic "1" when the input signal is connected to +3 V to +5 V or idling.
- The device collects logic "0" when the input signal is grounded.

Figure 1-3 Alarm input

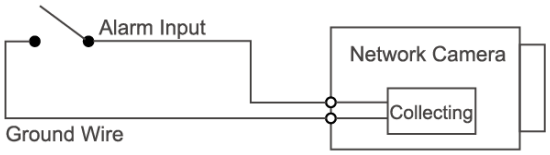

Step 2 Connect the alarm output device to the alarm output end of the I/O port. The alarm output is an open-drain output, which works in the following modes.

- Mode A: Level application. The alarm outputs high and low level signals, and the alarm outlet is OD, which requires external pull-up resistance (10 K Ohm typical) to work. The maximum external pull-up level is 12 V, maximum port current is 300 mA, and the default output signal is high-level (external pull-up voltage). The default output signal switches to low-level when an alarm is triggered (as long as the operating current is below 300 mA, the output low-level voltage is lower than 0.8 V).

- Mode B: Switch application. Alarm output is used to drive the external circuit. The maximum voltage is 12 V and the maximum current is 300 mA. If the voltage is higher than 12 V, use an additional electric relay.

Figure 1-4 Alarm output

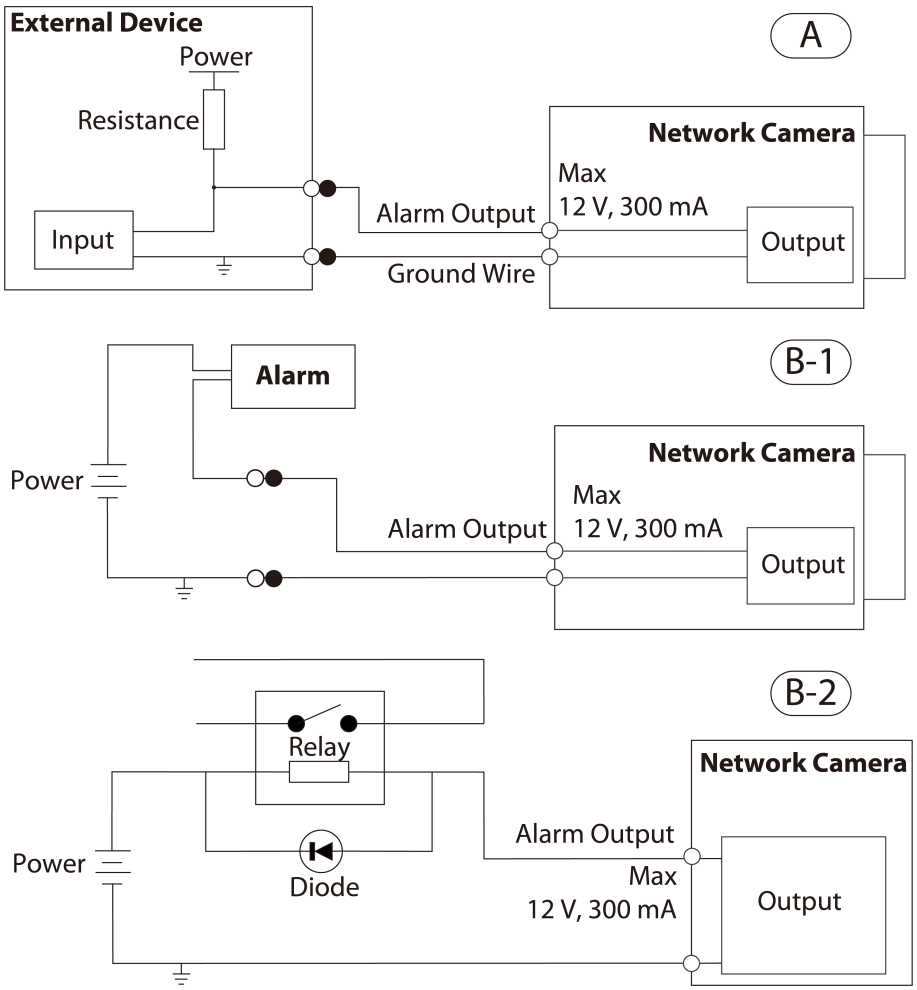

Step 3 Log in to the webpage, and then configure the alarm input and alarm output in alarm settings.

- The alarm input on the webpage corresponds to the alarm input end of the I/O port. There will be high-level and low-level alarm signals generated by the alarm input device when an alarm occurs. Set the input mode to "NO" (default) if the alarm input signal is logic "0", and set to "NC" if the alarm input signal is logic "1".
- The alarm output on the webpage corresponds to the alarm output end of the device, which is also the alarm output end of the I/O port.

2 Network Configuration

Device initialization and IP configurations can be managed either through ConfigTool or the device webpage. For more information, see the web operation manual.

- Device initialization is available on select models, and is required at first-time use and after the device is reset.
- Device initialization is available only when the IP address of the device (192.168.1.108 by default) and the computer are on the same network segment.
- Carefully plan the network segment for the device.
- The following figures and pages are for reference only.

2.1 Initializing the Camera

Procedure

Step 1 Search for the device that needs to be initialized through ConfigTool.

1. Double-click **ConfigTool.exe** to open the tool.
2. Click **Modify IP**.
3. Select the search conditions, and then click **OK**.

Step 2 Select the device to be initialized, and then click **Initialize**.

Enter the email address for password reset. Otherwise, you can only reset the password through the XML file.

Figure 2-1 Set the password

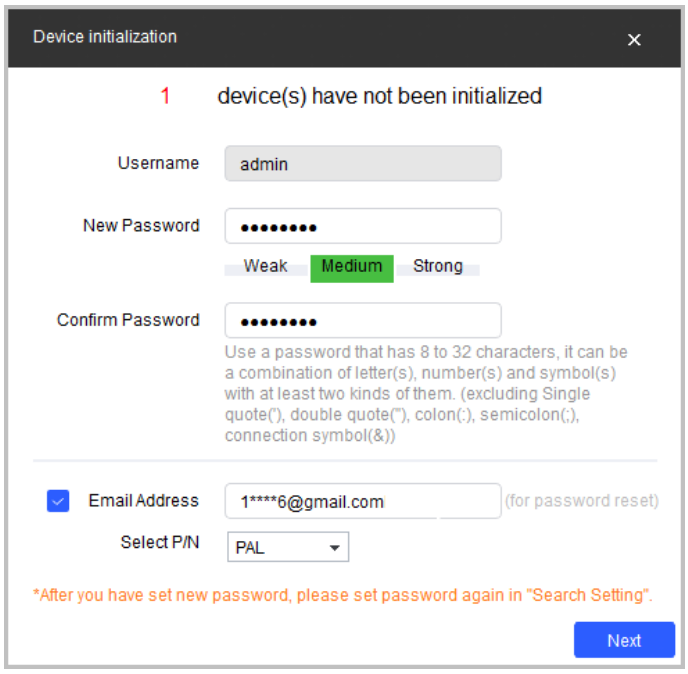

Step 3 Select **Auto-check for updates** , and then click **OK** to initialize the device.

If initialization fails, click ⚠ to see more information.

Step 4 Click **Finish**.

2.2 Changing the Device IP Address

Background Information

- You can change the IP address of one or more devices at a time. This section uses changing IP addresses in batches as an example.
- Changing IP addresses in batches is available only when the corresponding devices have the same login password.

Procedure

Step 1 Search for the device whose IP address needs to be changed through ConfigTool.

1. Double-click **ConfigTool.exe** to open the tool.
2. Click **Modify IP**.
3. Select the search conditions, enter the username and password, and then click **OK**.

The username is **admin**, and the password is the one that you set while initializing the device.

Step 2 Select one or more devices, and then click **Modify IP**.

Step 3 Configure the IP address.

- **Static** mode: Enter **Start IP**, **Subnet Mask**, and **Gateway**.

  The IP addresses of the devices will be modified successively starting from the first IP entered.

- **DHCP** mode: When the DHCP server is available on the network, the IP addresses of devices will be automatically assigned through the DHCP server.

The same IP address will be set for multiple devices if you select the **Same IP** checkbox.

Step 4 Click **OK**.

2.3 Logging in to the Webpage

Procedure

Step 1 Open a browser, enter the IP address of the device in the address bar, and then press the Enter key.

If the setup wizard opens, follow the on-screen instructions to complete it.

Step 2 Enter the username and password in the login box, and then click **Login**.

Step 3 (Optional) For the first-time login, click **Click Here to Download Plugin**, and then install the plugin as instructed.

The home page opens when the installation is complete.

3 Installation

3.1 Packing List

- Tools required for installation, such as the electric drill, are not included in the package.
- Scan the QR code to view the operation manual and tool information.

Figure 3-1 Packing list

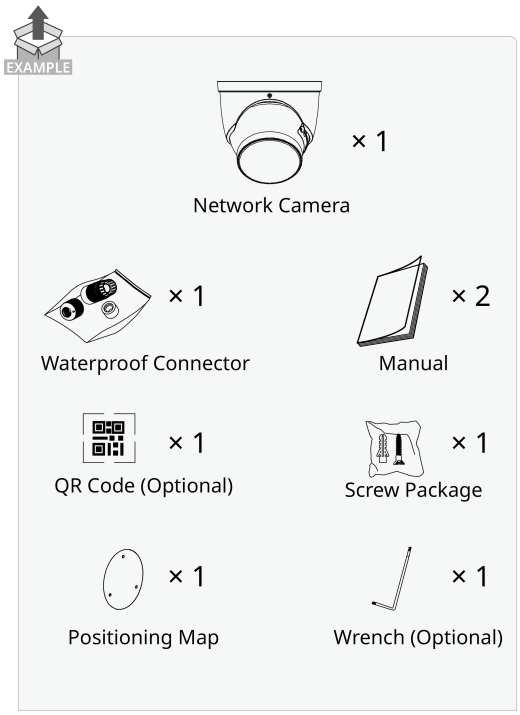

3.2 Installing the Camera

3.2.1 (Optional) Installing the SD Card

- SD card slot is available on select models.
- Disconnect the power before installing or removing the SD card.

You can press the reset button for 10 seconds to reset the device as needed, which will restore the device to factory settings.

Figure 3-2 Install the SD card

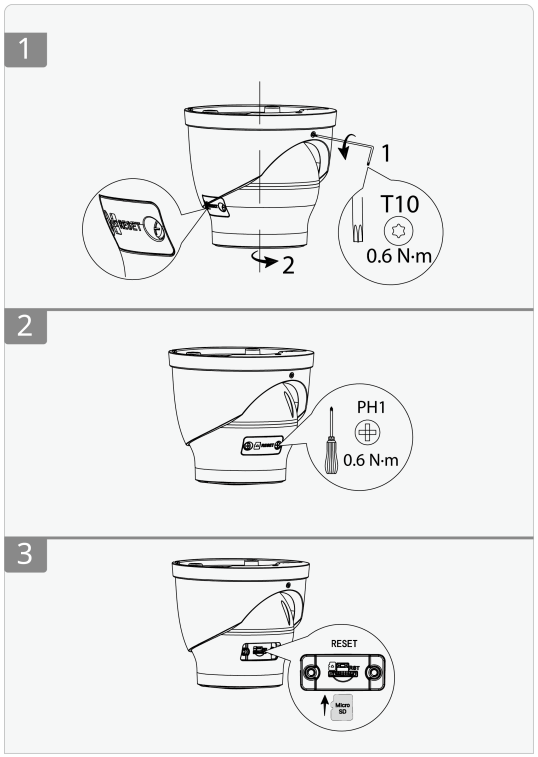

3.2.2 Attaching the Camera

Make sure that the mounting surface is strong enough to hold at least 3 times the weight of the camera and bracket.

Figure 3-3 Attaching the camera

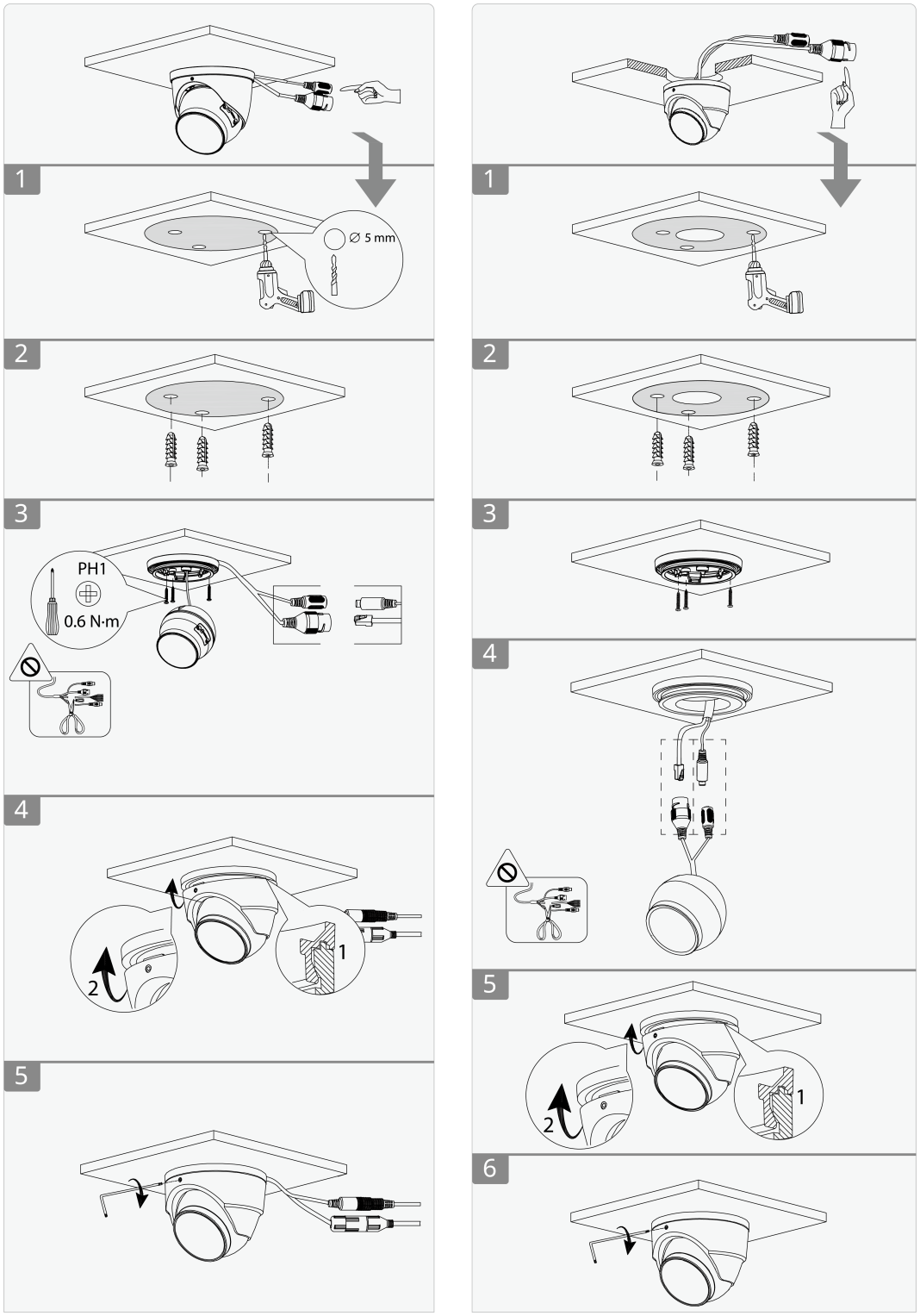

3.2.3 Waterproofing the Power Cord

Figure 3-4 Waterproof the power cord

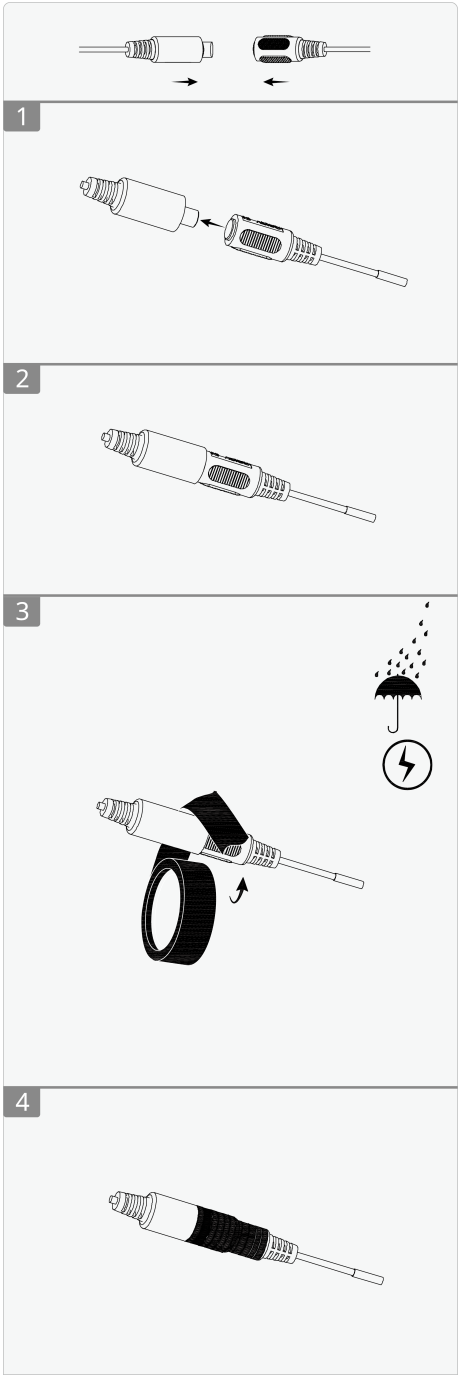

3.2.4 Installing the Waterproof Connector

This section is only necessary if a waterproof connector is included in your package, and the device is installed outdoors.

Figure 3-5 Install the waterproof connector

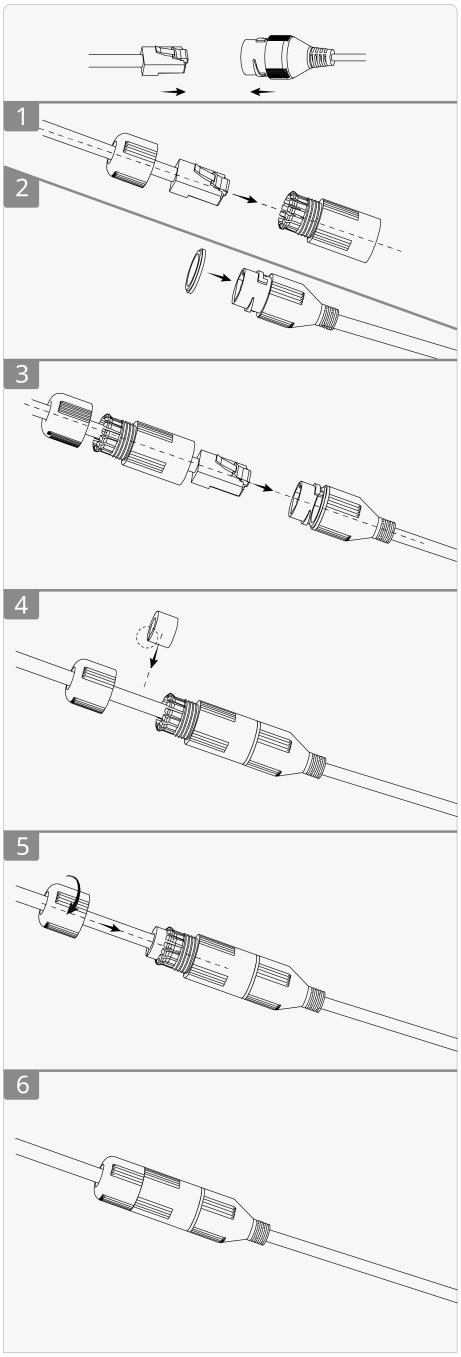

3.2.5 Adjusting the Lens Angle

Figure 3-6 Adjust the lens angle

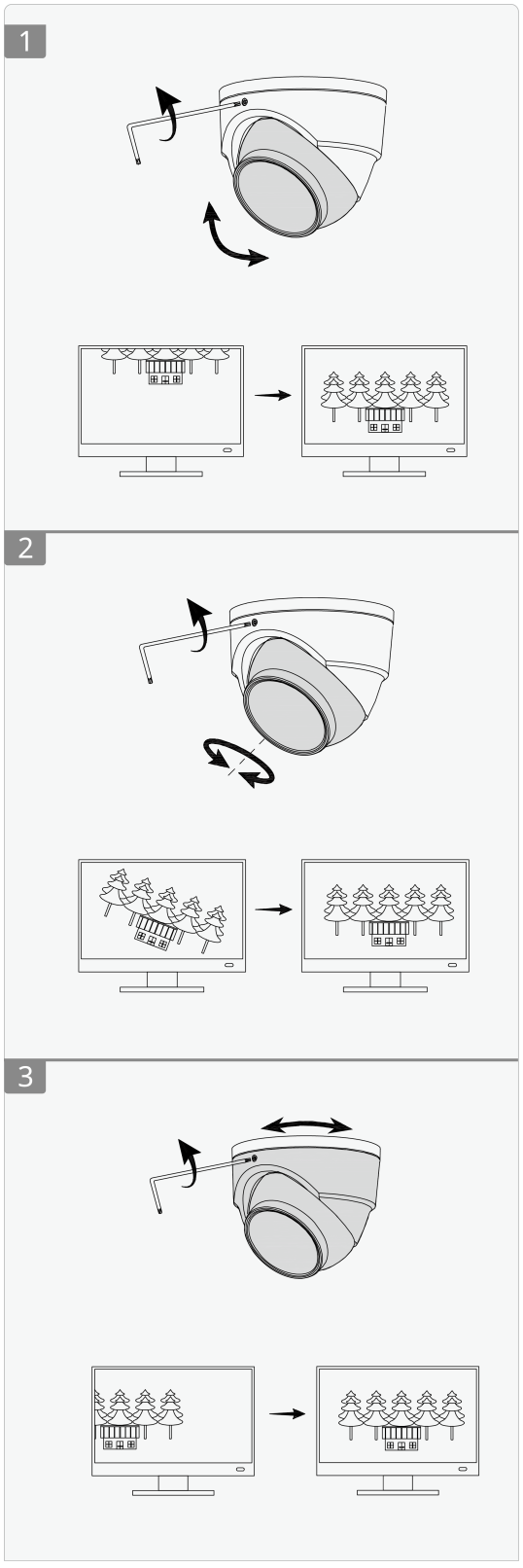

ENABLING A SMARTER SOCIETY AND BETTER LIVING

ZHEJIANG DAHUA VISION TECHNOLOGY CO., LTD.
Address: No. 1399, Binxing Road, Binjiang District, Hangzhou, P. R. China | Website: www.dahuasecurity.com | Postcode: 310053
Email: dhoverseas@dhvisiontech.com | Tel: +86-571-87688888 28933188